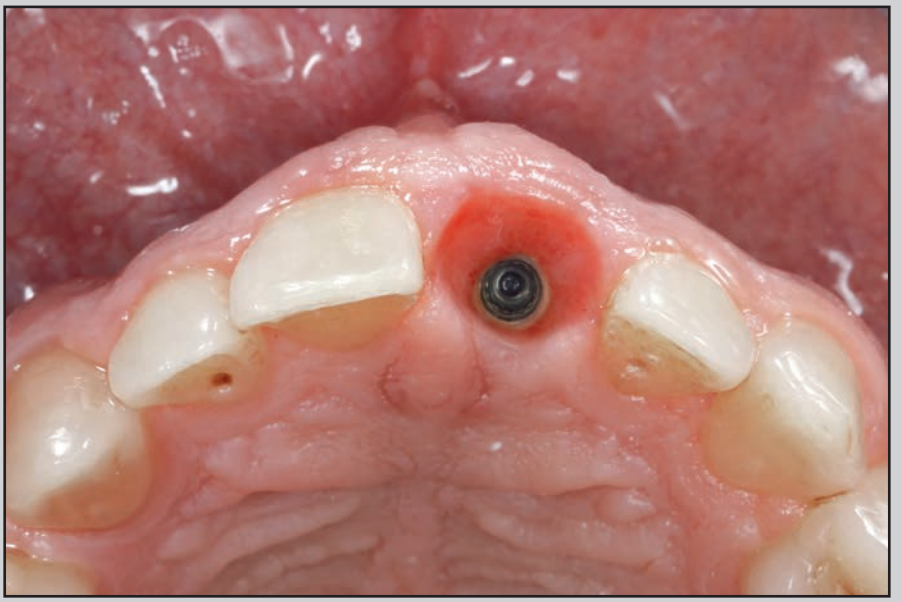



© 2023 BY QUINTESSENCE PUBLISHING CO, INC. PRINTING OF THIS DOCUMENT IS RESTRICTED TO PERSONAL USE ONLY.
NO PART MAY BE REPRODUCED OR TRANSMITTED IN ANY FORM WITHOUT WRITTEN PERMISSION FROM THE PUBLISHER.

Clinical Advances in Implant Transmucosal Contouring for Single Implant Sites: Prosthetic and Biologic Considerations



Stavros Pelekanos, DDS, Dr Med Dent[1]
Ioannis Vergoullis, DDS, MS[2]

Current evidence suggests that proper implant transmucosal contouring can significantly impact supracrestal soft tissue development and crestal bone response both in early and late stages of treatment. The macrodesign and composition of the anatomical healing abutment or temporary prosthesis used during transmucosal contouring are crucial elements for establishing biologic and prosthetic conditions that minimize early bone remodeling, improve esthetic outcomes, and reduce the possibility for future peri-implant inflammation. This article presents clinical directions on the design and fabrication processes of anatomical healing abutments or temporary prostheses for single implant sites under the interpretation of currently available scientific data. Int J Periodontics Restorative Dent 2023;43:301–310.
doi: 10.11607/prd.6054

[1]Department of Prosthodontics, School of Dentistry, National Kapodestrian University of Athens, Greece; Private Practice, Athens, Greece.
[2]Department of Periodontics, School of Dentistry, Louisiana State University, New Orleans, Louisiana, USA; Private Practice, Rhodes, Greece.

Correspondence to: Dr Stavros Pelekanos, 163B El. Venizelou (Thiseos) Av, Kallithea, Greece. Fax: +30 210 95 32 691. Email: s.pelekanos@athenasmile.gr

Submitted October 11, 2021; accepted April 17, 2022.
©2023 by Quintessence Publishing Co Inc.

Current evidence suggests that using an anatomical healing abutment or temporary prosthesis for transmucosal tissue contouring around an implant can impact the esthetic outcome, establishment of a protective mucosal barrier (peri-implant seal) on the suprastructure level, efficiency of plaque control, and risk of future peri-implantitis development.[1–4] The anatomical healing abutment and temporary prosthesis, commonly interchangeably called anatomical healers (AHs), have been prosthetically described as a unit that comprises two areas of interest, the critical and subcritical contours.[5] However, this description relates to prosthetic principles only, without accounting for the biologic response of the transmucosal zone during the interaction between the soft tissue and the subgingival portion of the AH. Human histology around dental implants reveals that, when measured vertically, the connective tissue (CT) zone expands approximately 1 to 1.5 mm supracrestally, the junctional epithelium (JE) zone ranges between 1.5 to 2.5 mm, and the sulcular epithelium (SE) zone (corresponding to the sulcus) ranges from 0.5 to 1.5 mm.[6] The CT and JE zones together form the peri-implant seal.[1,6,7] The vertical zone dimensions are directly affected by their horizontal dimensions, which determine the site's tissue

© 2023 BY QUINTESSENCE PUBLISHING CO, INC. PRINTING OF THIS DOCUMENT IS RESTRICTED TO PERSONAL USE ONLY.
NO PART MAY BE REPRODUCED OR TRANSMITTED IN ANY FORM WITHOUT WRITTEN PERMISSION FROM THE PUBLISHER.

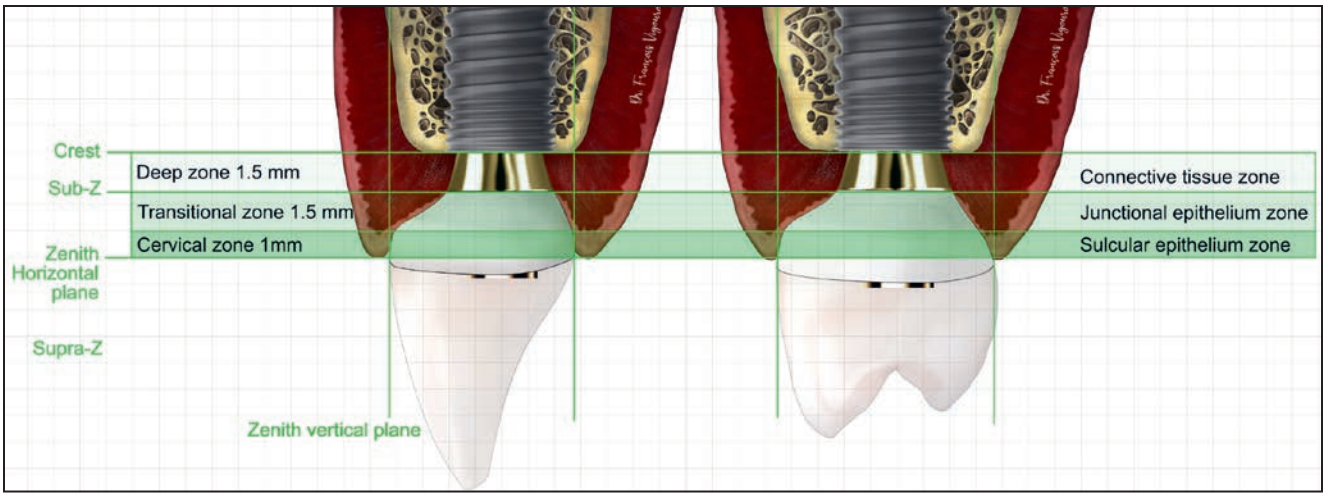

Fig 1 *Side view of an anterior (left) and posterior (right) AH. The different AH zones are defined, as well as their relationship to the peri-implant soft tissue zones and the zenith planes of the final prosthesis.*

phenotype and must also be taken into consideration.[8] Thus, a biologically enhanced AH should allow the peri-implant seal to form favorably on its surface and establish a transmucosal contour that will allow the placement of a sanitary and esthetically pleasing prosthesis.[3–5,9]

The purpose of this article is to provide updated directions on the process of design and fabrication of an AH in single-implant sites, considering the dimensions, profile shape, angles, composition, and surface treatment of the different portions of the AH in relation to the bone crest and the supracrestal soft tissue.

Materials and Methods

In the light of the above data, the proposed AH comprises two portions of interest, the subzenith and suprazenith portions, which are separated from the horizontal zenith plane of the future prosthesis (Fig 1). The subzenith portion comprises three zones of interest: the deep zone (DZ), which aims for favorable interaction with the CT and crestal bone; the transitional zone (TZ), which aims for favorable interaction with the JE; and the cervical zone (CZ), which aims (either alone or in combination with the TZ of the AH) for ideal adaptation of the marginal soft tissue and plaque control efficiency (Fig 1). The proposed AH is fabricated with a temporary or intermediate abutment as a core and a customizable temporary material as the anatomical body. Materials such as resins (acrylic, bis-acrylic, composite) and polyethyl and polymethyl methacrylate (PEMA and PMMA, respectively) allow epithelial attachment on their surface if they receive mechanical polishing and thorough cleaning. They must not be treated with any varnish material, nor with chlorhexidine solution, which can inhibit epithelial attachment.[10–12]

AH Design and Fabrication Protocol

Step 1: Establish the vertical and horizontal planes of the zenith point of the AH, based on the diagnostic model or the clinical examination, and design the suprazenith portion of the AH to closely mimic that of the future implant prosthesis.

Step 2: Plan the three-dimensional position of the implant platform. This must be centered mesiodistally (all sites). Buccolingually, it must be in a central (posterior sites) or lingual (anterior and immediate sites) position in relation to the prosthesis axis. Apicocoronally, it must be 3 to 4 mm deeper than the zenith point of the future prosthesis (bone-level implants).[1,6,7]

Step 3: Select a temporary (preferably titanium) or intermediate abutment with a concave or straight shoulder that comprises a narrow emergence angle (≤ 15 degrees) and a height that will allow the shoulder

© 2023 BY QUINTESSENCE PUBLISHING CO, INC. PRINTING OF THIS DOCUMENT IS RESTRICTED TO PERSONAL USE ONLY.
NO PART MAY BE REPRODUCED OR TRANSMITTED IN ANY FORM WITHOUT WRITTEN PERMISSION FROM THE PUBLISHER.

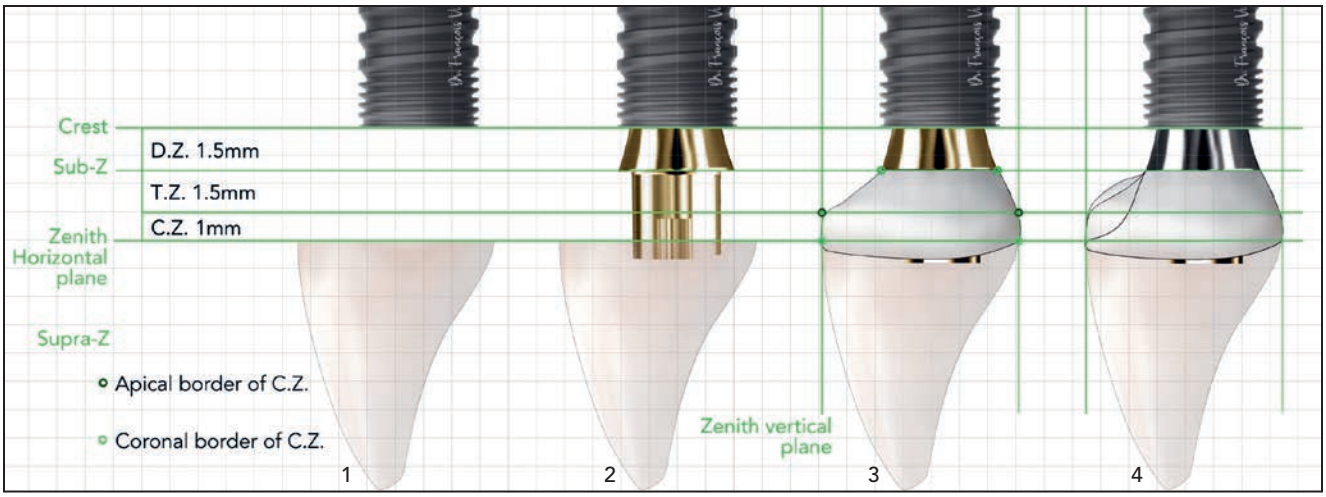

Fig 2 *Anatomical healer (AH) design protocol (side view).* (1) *The 3D implant position and suprazenith portion of the AH are planned.* (2) *The proper abutment shoulder height is selected in relation to the buccal crest to establish the DZ.* (3) *Initial designs of the TZ and CZ are created, utilizing the coronal and apical borders of the CZ, the coronal borders of the DZ, and the zenith planes for reference.* (4) *The black lines indicate the three design options for the TZ and CZ for different clinical scenarios.*

margin to be located 1.5 mm supracrestally. This shoulder will provide the DZ of the AH.[13–19]

Step 4: Identify and connect the coronal and apical borders of the CZ, located at the zenith point and 1 mm apically, to form the CZ. Then connect the coronal border of the DZ with the apical border of the CZ to form the TZ.

Step 5: Modify the CZ and/or TZ according to the design directions for different clinical conditions, described in the next section. Any modifications must be restricted within the vertical zenith planes of the AH to avoid overcontoured designs.

Step 6: Polish the CZ and TZ of the AH to ensure a highly polished surface and rounded transitions between the zones, with no sharp edges present.

Step 7: Prior to clinical use, disinfect the AH in argon plasma devices or in an ultrasonic bath with an alcohol solution, followed by thorough sterile saline irrigation.[12]

The design and fabrication protocols are shown in Fig 2.

Detailed Design Directions for Different Clinical Conditions

Subzenith AH Portion: Healed Sites

Deep zone

The DZ portion of the AH is provided by the titanium shoulder of the temporary or intermediate abutment, or by the polished collar of a soft tissue–level (STL) implant. The DZ design aims to provide a biocompatible surface and maximum lateral space for favorable adaptation of the connective tissue and crestal bone and a safe distance between the crestal bone and the microgap present at the shoulder margin.[13–19] Thus, there are three options (Fig 3) regarding the shoulder height:

Option 1: In case of equicrestally located bone-level implants, the shoulder height must be 1.5 mm.[15,16]

Option 2: In case of subcrestally located bone-level implants, the shoulder height increases accordingly so that its margin is located 1.5 mm supracrestally. For example, if the implant is placed 0.5 mm subcrestally, the shoulder height must be 2 mm.[15,16]

Option 3: In case of STL implants, the DZ is provided by the polished collar (PC) of the implant alone if the PC height is ≥ 1.5 mm. If the PC height is < 1.5 mm, the shoulder height must be chosen accordingly so that its margin is located 1.5 mm supracrestally. For example, if the PC is 1 mm, then a 0.5-mm shoulder height must be chosen.

To provide maximum lateral space for the CT zone, the emergence profile of the DZ must be straight or concave with an emergence angle (EA) that is ideally ≤ 15 degrees[17,18] (Fig 4). A convex

© 2023 BY QUINTESSENCE PUBLISHING CO, INC. PRINTING OF THIS DOCUMENT IS RESTRICTED TO PERSONAL USE ONLY.
NO PART MAY BE REPRODUCED OR TRANSMITTED IN ANY FORM WITHOUT WRITTEN PERMISSION FROM THE PUBLISHER.

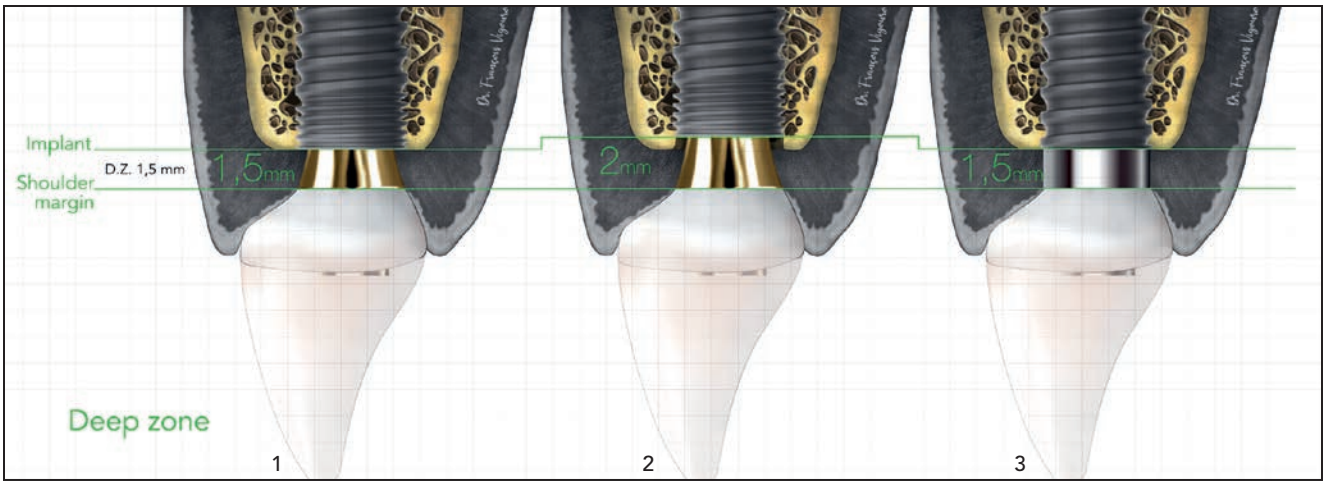

Fig 3 *Side view of AHs placed at different DZ crestal bone levels.* (1) *A 1.5-mm shoulder height is used or equicrestal implant position;* (2) *a 2-mm shoulder height is used for an implant positioned 0.5 mm subcrestally; and* (3) *a 1.5-mm polished collar for an STL implant will establish the DZ.*

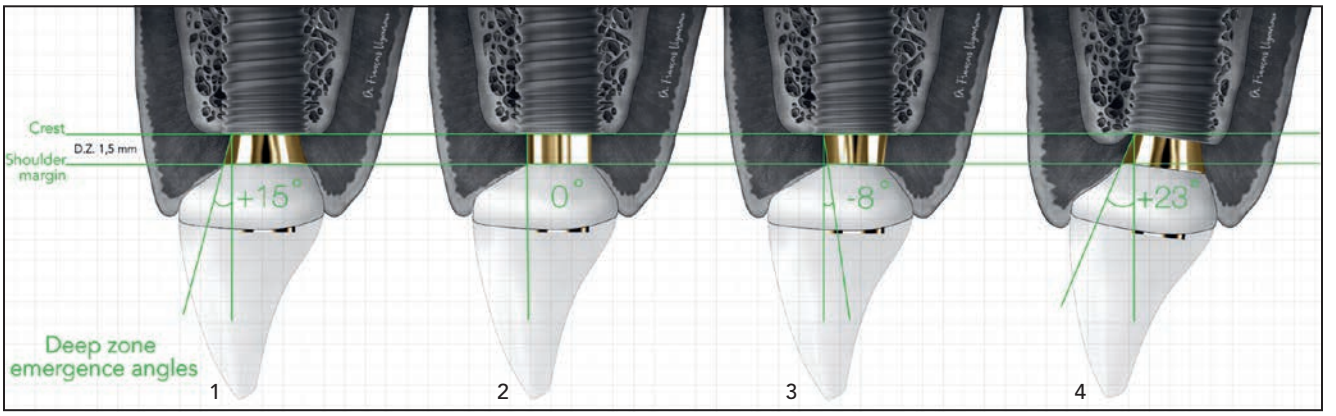

Fig 4 *Side view of the EAs in the DZ.* (1) *Straight profile with an EA of +15 degrees.* (2) *Straight profile with an EA of 0 degrees.* (3) *Straight profile with an EA of –8 degrees.* (4) *The angled implant axis in relation to the prosthesis axis and crest affects the EA.*

profile with an EA ≥ 45 degrees must be avoided, as it will provoke early crestal bone loss through remodeling.[17] It must be understood that any angulation of the implant axis in relation to the prosthesis axis and crest has a direct effect on this EA, and this factor should be considered during implant planning.

Transitional zone

Contrary to the EA of the DZ, the EA of the TZ can vary greatly in different cases depending on the implant platform position. However, the EA must always stay within 0 to 90 degrees, which provides sanitary contouring without a ridge lap design.

The emergence profile of the TZ in a buccolingual direction will be determined based on the tissue phenotype and on whether there is a need for buccal tissue displacement (Fig 5).[20–22] Thus, there are three options regarding the profile:

Option 1: A convex profile is selected for cases with a thick tissue phenotype that require buccal displacement of the soft tissue to restore deficient horizontal ridge dimensions.

Option 2: A straight profile is selected for cases with a thick tissue phenotype that do not need buccal displacement of the soft tissue.

Option 3: A concave profile is utilized in cases with thin tissue phenotype and cases receiving

© 2023 BY QUINTESSENCE PUBLISHING CO, INC. PRINTING OF THIS DOCUMENT IS RESTRICTED TO PERSONAL USE ONLY.
NO PART MAY BE REPRODUCED OR TRANSMITTED IN ANY FORM WITHOUT WRITTEN PERMISSION FROM THE PUBLISHER.

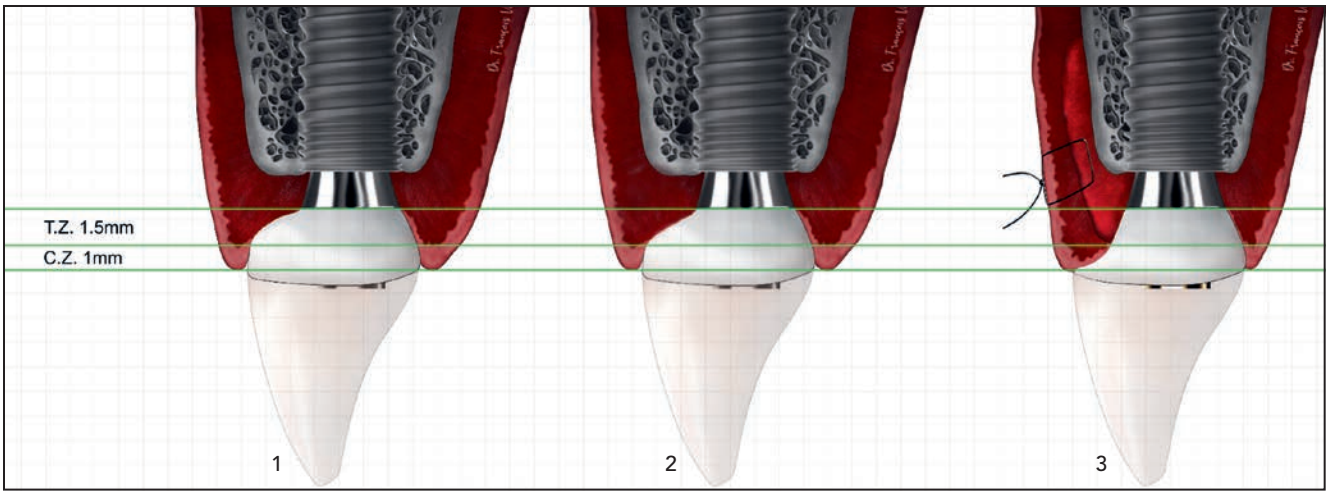

Fig 5 *Side view of the TZ and CZ design options for implants placed in healed sites.* (1) *Convex TZ and CZ, suitable for cases with a thick phenotype needing horizontal soft tissue expansion. (2) Straight TZ with a convex CZ, suitable for cases with a thick phenotype that do not need horizontal soft tissue expansion. (3) Concave TZ and CZ, suitable for cases with a thin tissue phenotype receiving tissue augmentation procedures.*

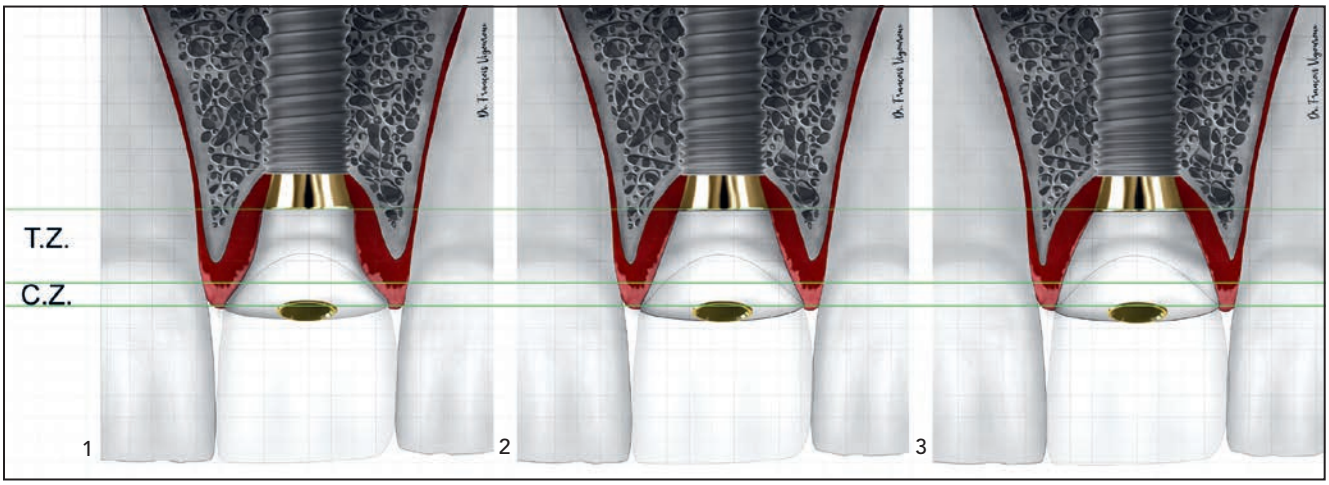

Fig 6 *Proximal design of TZ and CZ in healed anterior sites, demonstrating the effect of critical proximal space on the final design.* (1) *Concave TZ and CZ, suitable for cases with limited proximal space.* (2) *Straight TZ and CZ, suitable for cases with adequate proximal space and no need for papillae fill.* (3) *Convex TZ and CZ, suitable for cases with adequate proximal space and need for papillae fill.*

simultaneous hard and/or soft tissue regeneration procedures.[8,21–24]

The proximal emergence profile of the TZ will be determined based primarily on the available proximal space between the AH body and the proximal bone and root surfaces; it is based secondarily on the need for papillae coronal augmentation (papillae fill) (Figs 6 and 7). An open proximal space of 1.5 to 2 mm (critical proximal space) must always be respected to ensure proper support of the interdental papillae and access for oral hygiene.[19,25,26] There are two options regarding the profile:

Option 1: A straight (or concave, when necessary) proximal profile must be utilized to respect the critical proximal space for all cases that do not need coronal papillae augmentation (Fig 6).

Option 2: A convex proximal profile must be utilized when coronal papillae augmentation is necessary (Fig 6). However, this convex design can only be utilized if *(1)* the convex proximal profile respects the critical proximal space and *(2)* the prosthesis EA (PEA; defined according to

© 2023 BY QUINTESSENCE PUBLISHING CO, INC. PRINTING OF THIS DOCUMENT IS RESTRICTED TO PERSONAL USE ONLY.
NO PART MAY BE REPRODUCED OR TRANSMITTED IN ANY FORM WITHOUT WRITTEN PERMISSION FROM THE PUBLISHER.

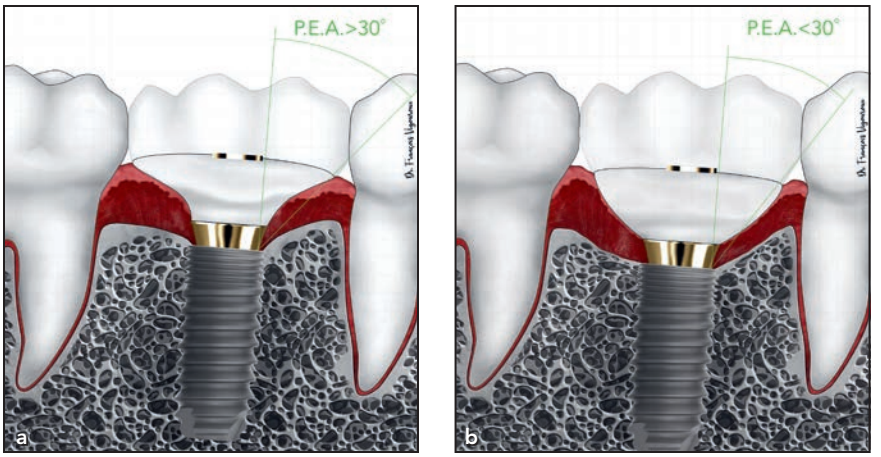

Fig 7 *Proximal design of TZ and CZ in healed posterior sites, demonstrating the effect of PEA on the final design.* (a) *Concave TZ and CZ, suitable for cases with a PEA > 30 degrees.* (b) *Convex TZ and CZ, suitable for cases with a PEA < 30 degrees and need for papillae fill.*

Table 1 Design Outline of the Different AH Zones on an Implant Placed in a Healed Site for Different Clinical Scenarios

	Thin phenotype	Thick phenotype	
	Need for tissue regeneration	Need for buccal tissue displacement	
Zone	Yes	No	Yes
DZ			
B-L	Straight or concave	Straight or concave	Straight or concave
Proximal	Straight or concave	Straight or concave	Straight or concave
TZ			
B-L	Concave	Straight	Convex
Proximal	Concave	Straight	Convex (PEA < 30 degrees) Straight or concave (PEA > 30 degrees)
CZ			
B-L	Concave	Convex	Convex
Proximal	Concave	Convex	Convex

AH = anatomical healer; B-L = buccolingual; CZ = cervical zone; DZ = deep zone; TZ = transitional zone; PEA = prosthesis emergence angle.

the 2017 Glossary of Prosthodontic Terms Committee of the Academy of Prosthodontics) is < 30 degrees (Fig 7).[19,21] If either of these two conditions are not satisfied, a straight or concave proximal profile must be utilized instead (Fig 7).

The design outlines for different clinical scenarios of healed sites in different zones are shown in Table 1.

Cervical zone

The buccolingual emergence profile of the CZ is determined based on tissue phenotype, and thus there are two options:

Option 1: In cases with a thick tissue phenotype, the CZ profile must be convex with a narrow EA (≤ 15 degrees) to properly support the marginal tissue (Fig 5).[5,21,27]

Option 2: In cases with a thin tissue phenotype, needing coronal tissue migration, and/or receiving simultaneous hard or soft tissue regeneration procedures, the CZ profile must be profoundly concave[21,22,24] (Fig 5).

Proximally, the CZ emergence profile follows the same principles as the TZ[21,26] (Figs 6 and 7).

© 2023 BY QUINTESSENCE PUBLISHING CO, INC. PRINTING OF THIS DOCUMENT IS RESTRICTED TO PERSONAL USE ONLY.
NO PART MAY BE REPRODUCED OR TRANSMITTED IN ANY FORM WITHOUT WRITTEN PERMISSION FROM THE PUBLISHER.

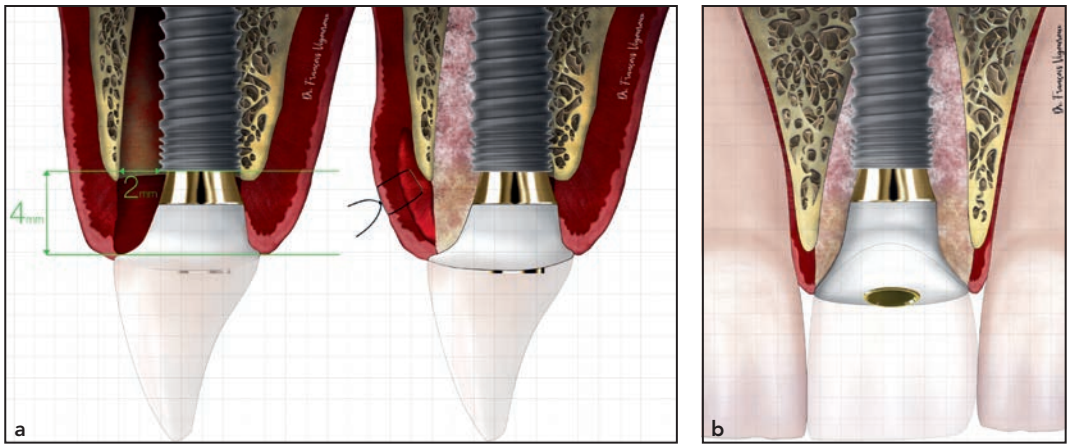

Fig 8 (a) *Side and* (b) *front views of an AH design for immediate implant sites. A proper 3D implant platform position allows the design of an AH with a profoundly concave emergence profile design for both the CZ and TZ, providing adequate space to apply regenerative materials for tissue support.*

Subzenith AH Portion: Immediate Implant Sites

In these cases, the DZ follows the same directions as implants placed in healed sites. The TZ and CZ are profoundly concave to allow space for the regenerative materials to both fill and support the soft and hard tissue zones during initial healing (Fig 8a).[21,28] Interproximally, both CZ and TZ maintain a straight or concave profile that respects the critical proximal space (Fig 8b).[21,26]

Figures 9 and 10 show the clinical application of the above directions in two clinical cases. The design outlines for an implant AHs in fresh extraction sites in different zones are shown in Table 2.

Discussion

The different zones of the AH can have significant biologic and esthetic impacts in the short and long term. Derks et al[15] and Chen et al[16] showed that the microgap distance from the abutment margin to the bone crest can significantly impact the bone crestal bone. Moreover, Souza et al[17] and Vela and Rodríguez[18] described that the EA and abutment shoulder shape can affect the crestal bone and the supracrestal soft tissue.

In accordance with the above information, the present article is the first to provide standardized parameters with regards to the DZ composition, dimensions, and shape in relation to the bone crest.[13–19] With regards to the buccolingual emergence profile (EP) of the CZ, the shape-selection process was simplified to two design options with a narrow EA: a convex profile for thick phenotype cases and a concave profile for both thin phenotype cases and immediate implant sites.[21–24,27] With regards to the buccolingual EP of the TZ, three options were recommended based on tissue phenotype and whether there is a need for horizontal soft tissue volume enhancement.[5,21,24,29] Although the proposed directions can be efficiently applied in cases with a proper 3D implant platform position and adequate supracrestal soft tissue height,[30] a limitation is that in nonideal cases, the clinician must work to ensure that the final EP shape for these zones must not lead to overcontoured designs (expanding further than the vertical zenith planes) that can provoke tissue recession, nor to ridge lap or uncleanable designs that provoke peri-implant inflammation.

Serino and Ström[3] and Monje et al[4] found that 74% and 77.2%, respectively, of the implants affected by peri-implantitis were associated with poor prosthesis design that did not allow proper access for plaque control. The ridge lap design can easily be avoided when the implant platform is located deep enough to allow, for these two zones, the establishment of EAs that are ≤ 90 degrees. Proximally, the emergence profile of both the TZ and CZ is substantially straight, sometimes concave, and the final choice is determined based on the available proximal space.[26] However, for cases requiring coronal papillae fill, a convex proximal EP can be utilized instead, as long as the critical proximal space is still respected and the PEA is < 30 degrees. Katafuchi et al[25] and Yi et al[19] showed that bone-level implants restored with

© 2023 BY QUINTESSENCE PUBLISHING CO, INC. PRINTING OF THIS DOCUMENT IS RESTRICTED TO PERSONAL USE ONLY.
NO PART MAY BE REPRODUCED OR TRANSMITTED IN ANY FORM WITHOUT WRITTEN PERMISSION FROM THE PUBLISHER.

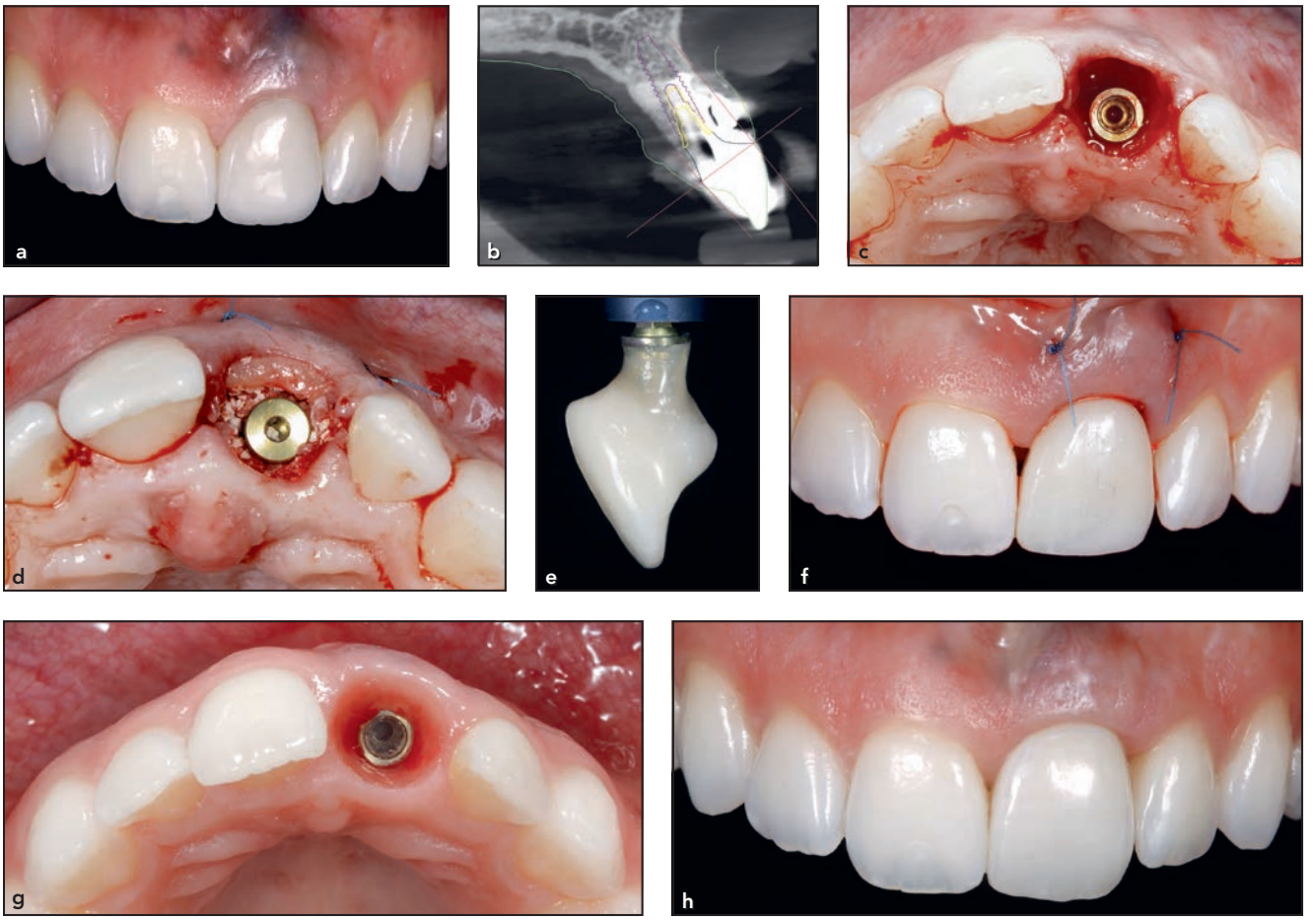

Fig 9 *Example clinical case 1.* (a) *Clinical view of a hopeless maxillary left central incisor.* (b) *A CBCT scan shows the planned implant platform position and AH design.* (c) *Occlusal view after extraction of the hopeless tooth. An intermediate abutment (Connect, MIS) was connected to the implant to provide the DZ of the AH.* (d) *Bone replacement xenograft (Cerabone, Botiss) and connective tissue graft were placed to reconstruct the defective buccal plate.* (e) *Side view of the AH design; a concave shape was established for both the TZ and CZ.* (f) *The AH was placed on the intermediate abutment.* (g) *The occlusal view at 4 months postoperative shows the created soft tissue topography.* (h) *Facial view of the final prosthesis immediately after delivery.*

prostheses comprising a PEA > 30 degrees are at higher risk for presenting proximal bone loss and developing peri-implantitis when they comprise a convex proximal profile. However, a PEA > 30 degrees was no longer a risk factor when the proximal profile was straight or concave.[19]

It must be understood that the proposed directions refer to the initial transmucosal contouring. The soft tissue conditions must be reevaluated and taken into account accordingly when designing the corresponding zones of the final prosthesis.

One major limitation of the present article is that it is not a clinical study but rather a set of directions that reflect the interpretation of the currently available scientific data and the personal experience of the authors. Clinical studies are needed to validate the proposed clinical directions.

Conclusions

This article provides clinical directions that can be applied during implant planning and the design, fabrication, and delivery of an AH abutment (or temporary prosthesis), aiming to achieve favorable

© 2023 BY QUINTESSENCE PUBLISHING CO, INC. PRINTING OF THIS DOCUMENT IS RESTRICTED TO PERSONAL USE ONLY.
NO PART MAY BE REPRODUCED OR TRANSMITTED IN ANY FORM WITHOUT WRITTEN PERMISSION FROM THE PUBLISHER.



Fig 10 *Example clinical case 2.* (a) *Clinical view of a hopeless maxillary left central incisor.* (b) *A CBCT scan shows the planned implant position, intermediate abutment selection, and TZ and CZ design.* (c) *Front and* (d) *side views of the AH. A concave design was utilized for both the TZ and CZ.* (e) *Facial view of the soft tissue adaptation 3 months post implant placement.* (f) *The occlusal view at 3 months post-operative shows the created soft tissue topography upon AH removal.* (g) *Facial view of the final prosthesis in place.* (h) *The radiographic evaluation at 1 year postloading shows adequate maintenance of hard and soft tissue dimensions.*

Table 2 Design Outline of the Different AHZones on an Implant Placed in a Fresh Extraction Site

Design of Zones for Immediate Sites	
DZ	
B-L	Straight or concave
Proximal	Straight or concave
TZ	
B-L	Concave
Proximal	Straight or concave
CZ	
B-L	Concave
Proximal	Concave

AH = anatomical healer; B-L = buccolingual; CZ = cervical zone; DZ = deep zone; TZ = transitional zone.

Table 3 Emergence Angles of the Different Zones

Zone	Emergence angle
DZ	≤ 15 degrees
TZ	0–90 degrees
CZ	≤ 15 degrees

CZ = cervical zone; DZ = deep zone; TZ = transitional zone.

© 2023 BY QUINTESSENCE PUBLISHING CO, INC. PRINTING OF THIS DOCUMENT IS RESTRICTED TO PERSONAL USE ONLY.
NO PART MAY BE REPRODUCED OR TRANSMITTED IN ANY FORM WITHOUT WRITTEN PERMISSION FROM THE PUBLISHER.

transmucosal tissue contouring for single implant sites.

Acknowledgments

The authors would like to thank Dr F. Vigouroux for his valuable assistance in the preparation of the graphics. The final restorations of the clinical cases presented were fabricated by N. Vlachopoulos, MDT. The authors declare no conflicts of interest.

References

1. Tonetti MS, Sanz M. Consensus report of Session B. In: Lang N, Karring T, Lindhe J (ed). Proceedings of the 3rd European Workshop on Periodontology and Implant Dentistry. Berlin: Quintessence, 1999:185–188.
2. Furze D, Byrne A, Alam S, Wittneben JG. Esthetic outcome of implant supported crowns with and without peri-implant conditioning using provisional fixed prosthesis: A randomized controlled clinical trial. Clin Implant Dent Relat Res 2016;18:1153–1162.
3. Serino G, Ström C. Peri-implantitis in partially edentulous patients: Association with inadequate plaque control. Clin Oral Implants Res 2009;20:169–174.
4. Monje A, Pons R, Insua A, Nart J, Wang HL, Schwarz F. Morphology and severity of periimplantitis bone defects. Clin Implant Dent Relat Res 2019;21:635–643.
5. Su H, Gonzalez-Martin O, Weisgold A, Lee E. Considerations of implant abutment and crown contour: Critical contour and subcritical contour. Int J Periodontics Restorative Dent 2010;30:335–343.
6. Tomasi C, Tessarolo F, Caola I, Wennström J, Nollo G, Berglundh T. Morphogenesis of peri-implant mucosa revisited: An experimental study in humans. Clin Oral Implants Res 2014;25:997–1003.
7. Berglundh T, Lindhe J, Ericsson I, Marinello CP, Liljenberg B, Thomsen P. The soft tissue barrier at implants and teeth. Clin Oral Implants Res 1991;2: 81–90.
8. Avila-Ortiz G, Gonzalez-Martin O, Couso-Queiruga E, Wang HL. The peri-implant phenotype. J Periodontol 2020;91:283–288.
9. Mattheos N, Vergoullis I, Janda M, Miseli A. The implant supracrestal complex and its significance for long-term successful clinical outcomes. Int J Prosthodont 2021;34:88–100.
10. Luchinskaya D, Du R, Owens DM, Tarnow D, Bittner N. Various surface treatments to implant provisional restorations and their effect on epithelial cell adhesion: A comparative in vitro study. Implant Dent 2017;26:12–23.
11. Saito H, Hsia RC, Tarnow DP, Reynolds MA. Cell adhesion to acrylic custom provisional abutment placed on an immediate implant: A case report. Compend Contin Educ Dent 2017;38:114–119.
12. Canullo L, Micarelli C, Lembo-Fazio L, Iannello G, Clementini M. Microscopical and microbiologic characterization of customized titanium abutments after different cleaning procedures. Clin Oral Implants Res 2014;25:328–336.
13. Abrahamsson I, Berglundh T, Glantz PO, Lindhe J. The mucosal attachment at different abutments. An experimental study in dogs. J Clin Periodontol 1998;25:721–727.
14. Nothdurft FP, Fontana D, Ruppenthal S, et al. Differential behavior of fibroblasts and epithelial cells on structured implant abutment materials: A comparison of materials and surface topographies. Clin Implant Dent Relat Res 2015;17:1237–1249.
15. Derks J, Schaller D, Håkansson J, et al. Effectiveness of implant therapy analyzed in a Swedish population: Prevalence of peri-implantitis. J Dent Res 2016;95: 43–49.
16. Chen Z, Lin CY, Li J, Wang HL, Yu H. Influence of abutment height on peri-implant marginal bone loss: A systematic review and meta-analysis. J Prosthet Dent 2019;122:14–21.e2.
17. Souza AB, Alshihri A, Kämmerer PW, Araújo MG, Gallucci GO. Histological and micro-CT analysis of peri-implant soft and hard tissue healing on implants with different healing abutments configurations. Clin Oral Implants Res 2018;29:1007–1015.
18. Vela X, Rodríguez X. The state of the art of the implant-abutment design to maximize the peri-implant tissue potential. In: Schoenbaum TR (ed). Implants in the Aesthetic Zone: A Guide for Treatment of the Partially Edentulous Patient. Cham, Switzerland: Springer, 2019:317.
19. Yi Y, Koo KT, Schwarz F, Ben Amara H, Heo SJ. Association of prosthetic features and peri-implantitis: A cross-sectional study. J Clin Periodontol 2020;47:392–403.
20. Rosenstiel SF, Land MF, Fujimoto J. Contemporary Fixed Prosthodontics, ed 5. St Louis, Missouri: Elsevier, 2015.
21. González-Martín O, Lee E, Weisgold A, Veltri M, Su H. Contour management of implant restorations for optimal emergence profiles: Guidelines for immediate and delayed provisional restorations. Int J Periodontics Restorative Dent 2020;40:61–70.
22. Gomez-Meda R, Esquivel J, Blatz MB. The esthetic biological contour concept for implant restoration emergence profile design. J Esthet Restor Dent 2021;33:173–184.
23. Goldstein G, Vafiadis D, Kim J. Finding Z: A mathematical method for predicting tissue position after implant abutment-restoration placement. J Prosthet Dent 2014;112:322–324.
24. Rungcharassaeng K, Kan JY, Yoshino S, Morimoto T, Zimmerman G. Immediate implant placement and provisionalization with and without a connective tissue graft: An analysis of facial gingival tissue thickness. Int J Periodontics Restorative Dent 2012;32:657–663.
25. Katafuchi M, Weinstein BF, Leroux BG, Chen YW, Daubert DM. Restoration contour is a risk indicator for peri-implantitis: A cross-sectional radiographic analysis. J Clin Periodontol 2018;45:225–232.
26. Perez F, Segalla JC, Marcantonio E Jr, Lauris JR, Ribeiro JG, Ferreira LP. Gingival papilla dimensions in anterosuperior regions adjacent to single-tooth implants. Int J Periodontics Restorative Dent 2012;32:93–100.
27. Du JK, Li HY, Wu JH, Lee HE, Wang CH. Emergence angles of the cementoenamel junction in natural maxillary anterior teeth. J Esthet Restor Dent 2011;23:362–369.
28. Chu SJ, Salama MA, Salama H, et al. The dual-zone therapeutic concept of managing immediate implant placement and provisional restoration in anterior extraction sockets. Compend Contin Educ Dent 2012;33:524–532, 534.
29. Wittneben JG, Brägger U, Buser D, Joda T. Volumetric calculation of supraimplant submergence profile after soft tissue conditioning with a provisional restoration. Int J Periodontics Restorative Dent 2016;36:785–790.
30. Linkevicius T, Apse P, Grybauskas S, Puisys A. The influence of soft tissue thickness on crestal bone changes around implants: A 1-year prospective controlled clinical trial. Int J Oral Maxillofac Implants 2009;24:712–719.

© 2023 BY QUINTESSENCE PUBLISHING CO, INC. PRINTING OF THIS DOCUMENT IS RESTRICTED TO PERSONAL USE ONLY.
NO PART MAY BE REPRODUCED OR TRANSMITTED IN ANY FORM WITHOUT WRITTEN PERMISSION FROM THE PUBLISHER.